Hand Wheel Dimensions: Measurement Guide

For use when ordering Roto Hammer Adapters, E and M Series Direct Mount Chain Wheels, Hand Wheels, and Extensions.

Step 1: Unscrew the retaining nut and remove the hand wheel from the existing valve.

Step 2: Measure the hand wheel dimensions and fill out the **Hand Wheel Replacement Data Sheet** so your chain wheel, hand wheel, or extension can be machined to your exact specifications. The hand wheel depicted below shows a hex hole. Other options include: round hole with keyway or crossdrill, square hole, or rectangle hole.

Measure the "D" and "E" Dimensions
(For Hex Hole, measure flat-to-flat)

Measure the "C" Dimension (hub thickness)

Hand Wheel Replacement Data Sheet

For use when specifying all Roto Hammer "Direct Mount", Chain Wheels (E Series or M Series), Hand Wheel or Extensions. The specified dimensions can be determined by measuring the shape and size of the bore in the existing hand wheel or by measuring the corresponding dimensions from the valve actuator riser or shaft.

For Shapes Not Shown, Please Include Dimenional Sketch With Order.

Round Hole w/ keyway

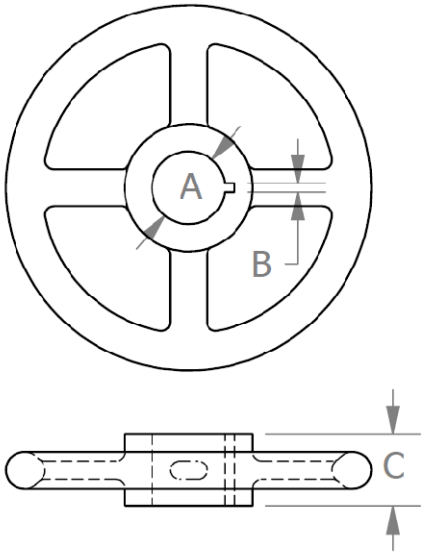

Round Hole w/ crossdrill

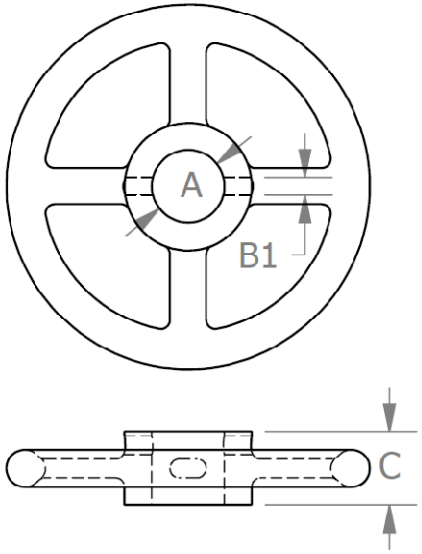

Valve Size & Manufacturer	Hand Wheel Diameter	Roto Hammer Model #	Round Hole w/ key way			Round Hole w/ cross drill		
			A	B	C	A	B1	C

Hand Wheel Replacement Data Sheet

For use when specifying all Roto Hammer "Direct Mount", Chain Wheels (E Series or M Series), Hand Wheel or Extensions. The specified dimensions can be determined by measuring the shape and size of the bore in the existing hand wheel or by measuring the corresponding dimensions from the valve actuator riser or shaft.

For Shapes Not Shown, Please Include Dimenional Sketch With Order.

Square Hole

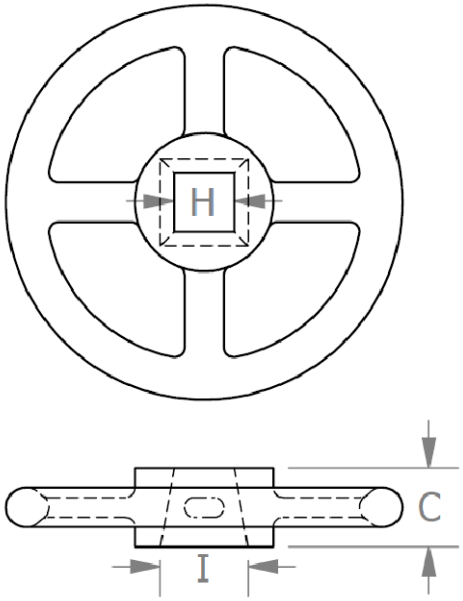

Rectangle Hole

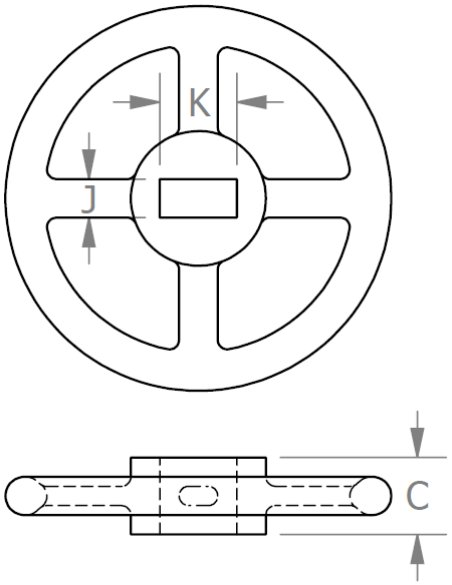

Valve Size & Manufacturer	Hand Wheel Diameter	Roto Hammer Model #	Square Hole			Rectangle Hole		
			H	I	C	J	K	C

Hand Wheel Replacement Data Sheet

For use when specifying all Roto Hammer "Direct Mount", Chain Wheels (E Series or M Series), Hand Wheel or Extensions. The specified dimensions can be determined by measuring the shape and size of the bore in the existing hand wheel or by measuring the corresponding dimensions from the valve actuator riser or shaft.

For Shapes Not Shown, Please Include Dimenional Sketch With Order.

Hex Hole

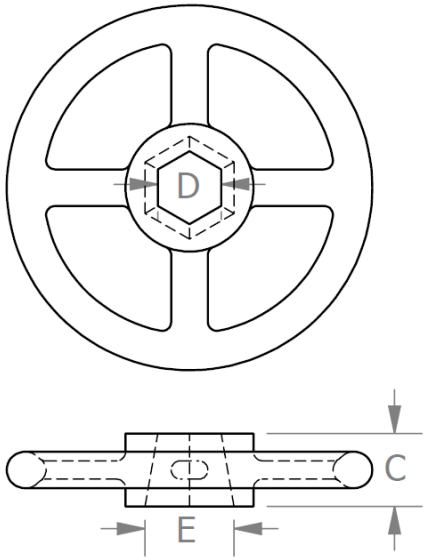

Octagon Hole

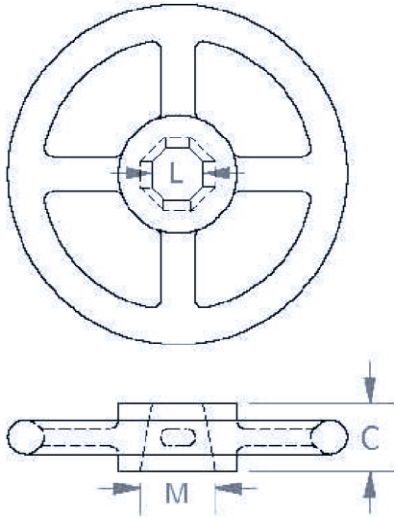

Valve Size & Manufacturer	Hand Wheel Diameter	Roto Hammer Model #	Hexagon Hole			Octagon Hole		
			D	E	C	L	M	C